1-57. TROUBLESHOOTING ELECTRICAL CIRCUITS

NOTES

Two tips so basic they are often overlooked:

1. Does the circuit have PROPER OPERATING VOLTAGE? This connects the circuit back to the positive side of the battery.

CHECK FOR PROPER OPERATING VOLTAGE

a. DO use high quality voltmeter to measure amplitude of voltage where it enters the circuit. A digital voltmeter that has a DC Accuracy of ±0.5% or ±0.25% is recommended for accuracy.

b. DO be sure the circuit is in the operating mode and functioning (Dynamic test).

c. DO measure for proper operating voltage under the proper conditions. The operating voltage for the electrical and electronic system, when the engine is off, is the battery voltage of about 12.6 volts. While the engine is running, the operating voltage is the charging voltage—about 14.0 to 14.5 volts.

d. DO NOT rely on a test light; it won't verify voltage amplitude. A test light can't tell the difference between 12.6 or 14.5 volts and may even damage sensitive electronic circuits containing solid-state components.

NOTES

2. Does the circuit have a PROPER GROUND CONNECTION? This is especially important with high current ground connections. The ground connection connects the circuit back to the negative side of the battery.

CHECKING FOR GOOD GROUND CONNECTIONS

a. DO remove operating voltage from circuit before checking ground path continuity with ohmmeter. USE THE OHMMETER METHOD ONLY ON LOW CURRENT GROUND CONNECTIONS to verify the ground is connected.

b. DO check HIGH CURRENT GROUNDS, such as the ground connection for the battery's negative terminal by measuring the voltage drop across the ground connection (explained in Paragraph 4-7). Use a digital voltmeter for the most accurate measurement. Any voltage drop above 0.1 volt should be considered bad (Paragraph 4-1). Make sure high current is flowing during the time the voltage drop measurement is made.

In the diagram below, note the position of the two voltmeter test leads. They are connected directly across the entire ground connection, measuring from the ground wire to the metal chassis (ground).

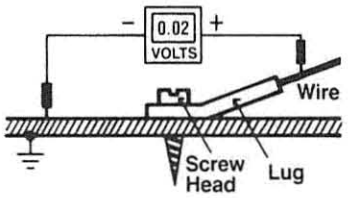

Measuring Voltage Drop of Ground Connection

c. DO NOT check high current grounds with an ohmmeter. They will usually check good with an ohmmeter even when bad.

d. DO NOT use self-powered test light to verify ground connections. It is not accurate and could damage sensitive circuits containing solid-state components.

After checking the two basic circuit conditions (operating voltage and ground connections), check for the needed input or the desired output from the circuit. Without performing these two basic checks, potential problems in these two parts of the circuit can be overlooked.

NOTES

1-58. USING THE VOLTMETER TO MEASURE VOLTAGE

There are two basic ways to use a voltmeter:

1. Measuring Circuit Voltages:

In the schematic below, the method used to measure the circuit voltage at a given point in the circuit is shown. First the voltmeter's negative test lead is grounded. Be careful when using a metal bracket under the dash for a ground connection because they are not always grounded. If the voltmeter is poorly grounded, it will read a lower voltage or even zero volts even when proper voltage is present in the circuit. After proper grounding, the positive test lead is then used to sample the circuit voltage at any point in the circuit.

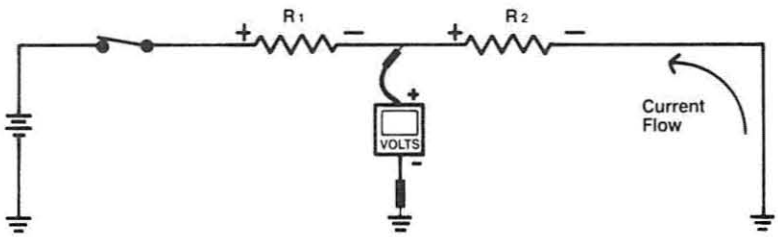

2. Measuring Voltage Drop:

USING AN ANALOG VOLTMETER:

To measure the voltage drop across a component, determine the expected polarity of the voltage drop before inserting the analog voltmeter test leads directly across the component. The side of the component that connects back towards the positive battery terminal gets the positive analog voltmeter test lead. The side of the component that connects back towards ground gets the negative analog voltmeter test lead.

USING A DIGITAL VOLTMETER:

If the digital voltmeter and the test leads are reversed across the component, it will not damage the digital voltmeter. It will read the voltage drop with a minus sign in front of the reading to indicate the test leads are reversed across the component.

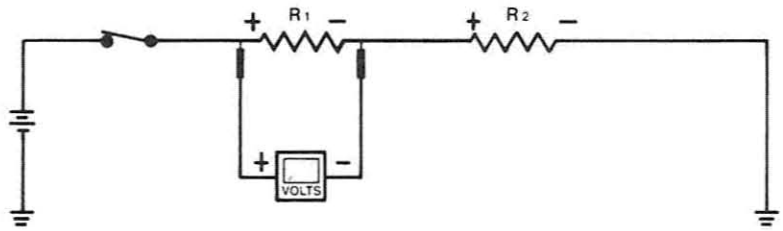

The voltmeter will read the voltage dropped across the component, R_1, provided, of course, that the circuit is turned on and current is flowing through R_1.

NOTES

IF R_1 IS OPEN:
If R_1 is open the voltmeter will read battery voltage. A high impedance (10 megohm) voltmeter will always read source (battery) voltage across an open connection in a series circuit.

IF R_1 IS SHORTED:
If R_1 is shorted the voltage drop will be 0 volts because there is no voltage drop developed across a short. Suppose that 25 amps flows through R_1. Referring back to Ohm's Law; E_{R1} = 25 amps x 0 ohms. The answer is E_{R1} = 0 volts. The voltage dropped across R_2 is not measured in this test.

1-59. GENERAL TIPS USING AN OHMMETER

1.To disconnect operating voltage, be sure circuit is not connected to voltage, turn circuit's switch off, remove fuse or disconnect one wire, etc. Voltage present in a circuit can damage the ohmmeter.

2. Zero ohmmeter to read zero ohms with test leads shorted together. This tells you the ohmmeter is working and calibrates the ohmmeter to accurately indicate the measured resistance.

3. Exercise caution when using an analog ohmmeter around circuits containing solid-state components. Some solid-state components can be damaged by an analog ohmmeter's test voltage (around 1.5v). Digital ohmmeters, without diode test feature, have a low ohmmeter test voltage (around .2 v) and are safe around electronic circuits.

4. How an ohmmeter measures resistance: The ohmmeter has a test voltage that generates a test current. The test current flows out one test lead through the circuit being tested and back into the other test lead. The amount of current flowing is determined by the resistance of the circuit connected between the test lead probe tips. The ohmmeter measures the amount of test current flowing to determine how much resistance is being measured. The path of ohmmeter test current through the circuit is the portion of the circuit having its resistance checked. If test current is not flowing through a portion of the circuit, you are not checking its resistance.

1-60. USING AN OHMMETER TO MEASURE RESISTANCE

NOTES

There are two basic ways to use an ohmmeter:

1. Measuring Circuit Resistance:

Note the switch is open removing voltage from the circuit. Ground one test lead of the ohmmeter. Be careful to find a good ground connection for the ohmmeter. If a bad ground connection is used, the ohmmeter will read a higher than normal resistance or open circuit. Insert the other test lead into the circuit to measure circuit resistance at that point in the circuit. Trace the path of ohmmeter test current to determine what portions of the circuit are being measured.

In the schematic below, the ohmmeter test current is only flowing through the resistance of R_2. The resistance of R_1 is not measured in this test. If a resistance measurement is obtained, then it can be assumed the ground is connected. To verify that the ground connection is good requires a voltage drop measurement. Never rely on an ohmmeter reading to determine a ground connection's quality.

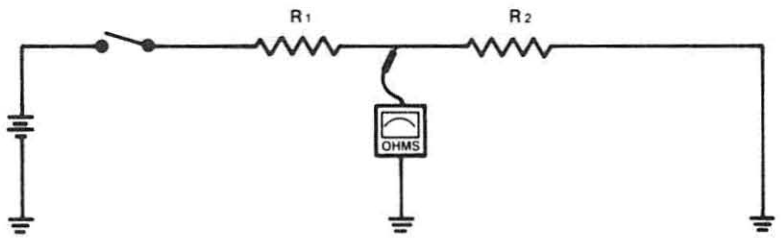

2. Measuring A Component's Resistance

To measure the resistance of R_1, place the ohmmeter directly across R_1 as shown. Notice the switch is open to protect the ohmmeter. Ohmmeter test current can only flow through R_1. No ohmmeter test current can flow through R_2 so its resistance is not measured in this test.

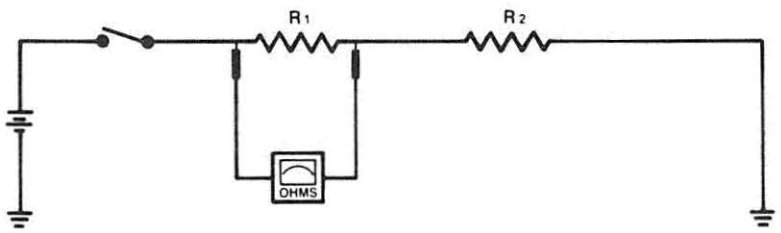

NOTES

1-61. WATCH FOR PARALLEL PATHS

Parallel paths for the ohmmeter test current will cause the ohmmeter to read a lower than normal resistance reading. This could seem to indicate a problem in the circuit when there isn't one or cause you to overlook the fact that R_1 is open.

In the circuit below, resistor R_3 must be disconnected (as shown) before attempting to read the resistance of R_1. If R_3 was left connected in the circuit, the ohmmeter will read the total resistance of R_1 and R_3 in parallel. Not knowing that R_3 is there would cause a misinterpretation of the ohmmeter test reading for R_1.

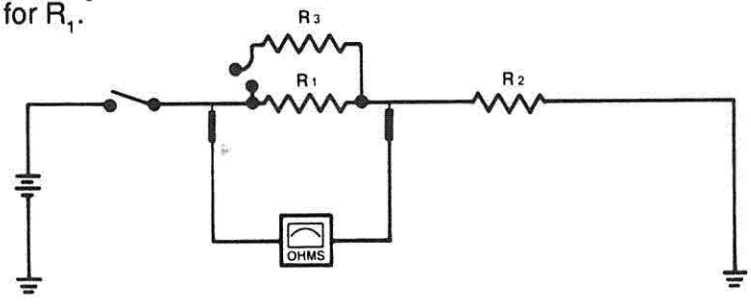

1-62. USING AN AMMETER TO CHECK CURRENT

1. Observe correct polarity when connecting an analog ammeter into the circuit. A digital ammeter can be connected either way. If it is connected backwards, the current reading will be preceeded by a minus sign.

2. Disconnect power to the circuit before installing ammeter in series with the circuit.